CN GB 说明书 | Description

Industrial Burner Systems

自身预热式烧嘴
Recuperative Burner

RECUFIRE®

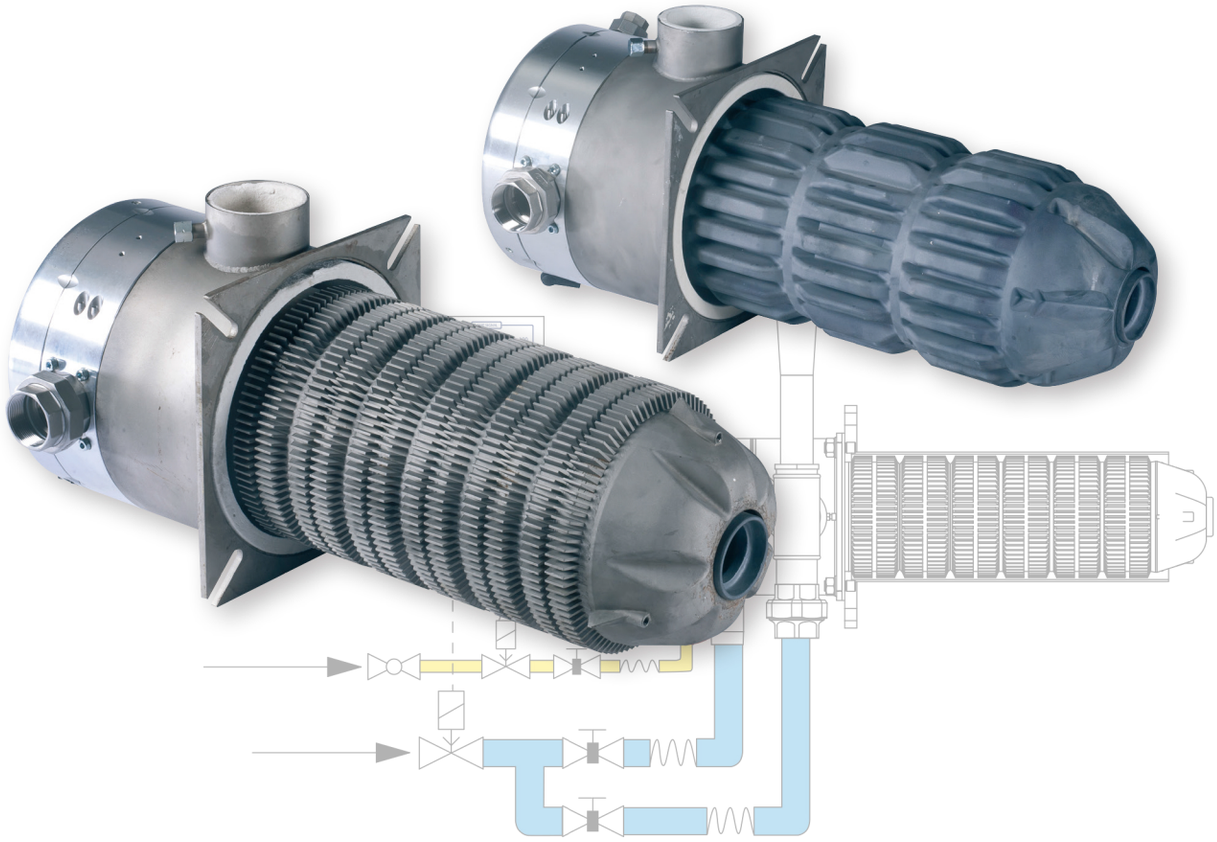

性能

- 带集成换热器的高速烧嘴，利用燃烧废气预热助燃空气
- 节能率最高可达 50 % (取决于具体应用)
- 功率：15 – 400 kW
- 换热器材质：金属和陶瓷
- 应用于工业炉的直接加热或间接加热
- 单端辐射管 (I型管) 直径: 100 – 300 mm
- 直接电极点火
- 火焰监测方式：电离棒 (单电极操作) 或 UV-探针
- 火焰速度高
- NOx低排放
- 适用于天然气，液化气，焦炉煤气，焦炉高炉混和煤气

DESCRIPTION

- High-velocity burner with integrated heat exchanger for preheating combustion air from the combustion exhaust gases
- High energy saving up to 50 % (depending on the application)
- Power range 15 – 400 kW
- Metallic and fully ceramic version available
- For direct and indirect heating of industrial furnaces
- Single-ended radiant tubes with 100 – 300 mm diameter available
- Direct electric ignition
- Flame detection with ionisation rod (single-electrode operation) or UV-probe
- High flame velocity
- NOx-reduced combustion
- Suitable for natural gas, LPG, coke oven gas, coke-oven-blast furnace-mixed gas

12/2013

应用

间接加热（辐射管）
- 带保护气氛的辊底炉
- 带保护气氛的室式炉
- 连续式热处理炉
- 应用于单端辐射管，P型及双P型辐射管

直接加热（明火燃烧）
- 室式炉 (用于热处理)
- 台车加热炉或焙烧炉
- 明火加热的辊底炉
- 环形炉

APPLICATIONS

INDIRECT HEATING
- Inert gas roller hearth furnaces
- Inert gas chamber furnaces
- Continuous strip lines
- Use in single-ended radiant tubes, P- and double-P radiant tubes

DIRECT HEATING
- Chamber furnaces for heat treatment
- Bogie hearth furnaces for heating and forging
- Roller hearth furnaces with open flame
- Rotary hearth furnaces

辐射管加热系统 RECUFIRE®

自身预热式烧嘴为间接加热系统设计，可配备单端辐射管（I型辐射管），P型或双P型辐射管使用。热能通过辐射管的热辐射传递到炉膛内，结合使用分节式 FIREFLEX® 陶瓷火焰管，能够最大程度优化不同直径的辐射管在使用不同燃气时的温度分布。我们的专利产品 FIREFLEX® 分节式火焰管可以承受比金属火焰管更大强度的变形而不受损(见下图)。在需要承受较大热应力的情况下，建议使用我们的陶瓷单端辐射管。

RADIANT TUBE SYSTEM RECUFIRE®

RECUFIRE® recuperative burners are conceived for an application in indirect heating systems such as single-ended radiant tubes, P- and double-P radiant tubes. Heat is transferred to the furnace chamber by temperature radiation of the radiant tube.
In combination with the ceramic segment flame tube FIREFLEX®, maximum temperature uniformity is achieved with the different radiant tube diameters and gas types. The patented segment flame tube FIREFLEX® allows a considerable deflection range of metallic radiant tubes without suffering any damage itself (see picture).
We would advise our ceramic single-ended radiant tubes which are laid out for coping with the most exacting thermal stress.

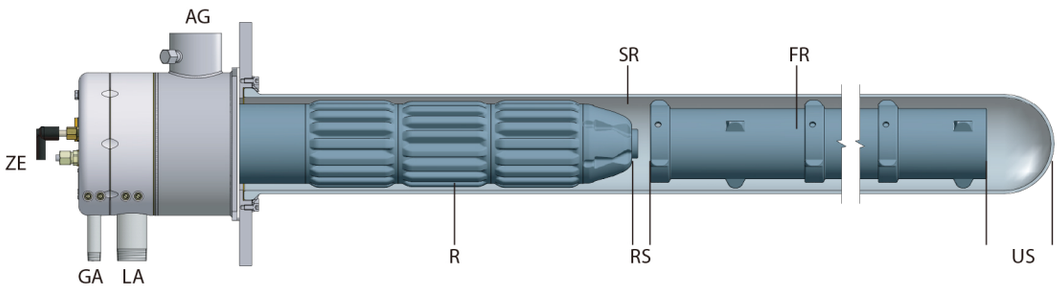

说明 Legend:

GA – 燃气接口 gas connection
LA – 空气接口 air connection
AG – 烟气接口带测量接口
exhaust gas connector with measuring point
ZE – 点火 / 检火一体式电极
ignition and guard electrode

R – 换热器 recuperator
SR – 辐射管 radiant tube
FR – 火焰管 (FIREFLEX®) flame tube (FIREFLEX®)
RS – 循环间隙 recirculation gap
US – 转向区 deflection gap

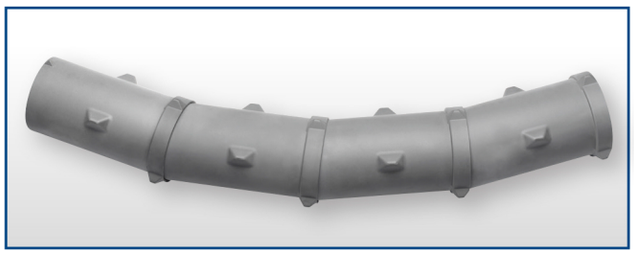

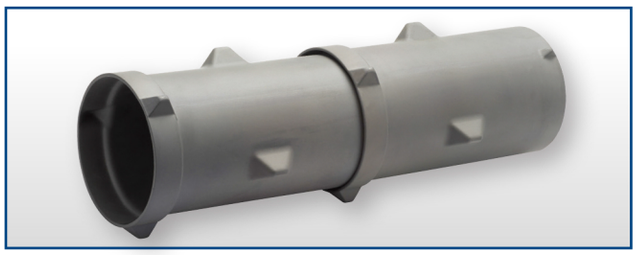

图上展示了分节式 FIREFLEX® 陶瓷火焰管在金属辐射管中可能经受的最大变形。分节式的结构设计使火焰管的长度可以按需求调节。

Possible deflection of the ceramic segment flame tube FIREFLEX® inside the metallic radiant tube. The segmented construction of the flame tube allows combining flame tubes of various lengths.

直接加热 RECUFIRE®

通过安装 **IBS** 烟气引射器，RECUFIRE® 自身预热式烧嘴技术也可以应用于明火加热的工业炉。烟气引射器采用喷气式飞机泵的原理，能够将废气 100 % 从炉膛通过烧嘴的换热器排出。通过调节烟气引射器的吸力可直接影响炉膛压力。安装碳化硅材质的陶瓷换热器，RECUFIRE® 烧嘴能够应用于炉温更高的炉型，如锻造炉。

OPEN HEATING RECUFIRE®

Due to the **IBS** exhaust gas ejector the RECUFIRE® recuperative burner technology is also available for industrial furnaces with open heating. The exhaust gas ejector functions like a jet-pump and draws off the exhaust gases 100 % from the furnace chamber by means of the burner recuperator. The adjustable suction effect of the exhaust gas ejector makes it possible to directly influence the furnace chamber pressure. Thanks to the ceramic recuperator made of SiSiC, the recuperative burner RECUFIRE® is suitable also for exposure to the most exacting thermal stress, for example in forging furnaces.

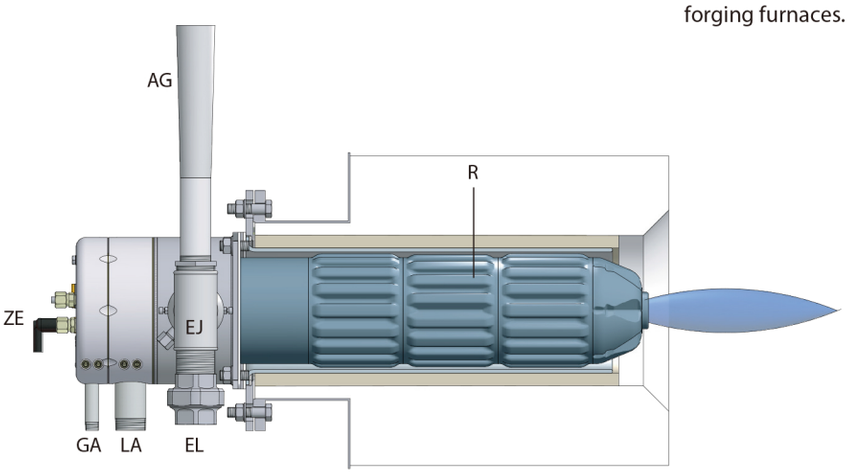

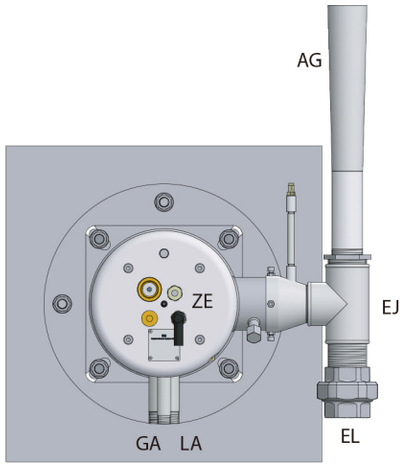

说明 **Legend:**

GA – 燃气接口 gas connection
LA – 空气接口 air connection
LE – 引射器空气接口 connector for ejector air
EJ - 烟气引射器 exhaust gas ejector

AG – 烟气接口带测量接口
exhaust gas connector with measuring point
ZE – 点火 / 检火一体式电极
ignition and guard electrode
R – 换热器 recuperator

节能

右侧的图表呈现了RECUFIRE® 自身预热式烧嘴的热效率，助燃空气的预热温度以及节能率与换热前的废气温度的关系。在直接加热系统中，图表中所提到的“换热前的废气温度“等同于直接加热系统的炉膛温度。对于辐射管加热系统，“换热前的废气温度“比炉膛温度高大约 130 – 150 K。因此在选择烧嘴时，一定要考虑到这一点（陶瓷材料更耐高温）。
图表中的数据仅供参考，请提供我们详细的技术参数，以便我们为您提供更详尽的设计方案。

ENERGY SAVING

The graphs on the right side display the thermal efficiency, the combustion air preheating and the corresponding energy saving of the recuperative burners RECUFIRE®. The stated “exhaust gas temperature before Recu [°C]” indicates the furnace chamber temperature in open heated furnace systems. In furnaces heated by radiant tubes the “exhaust gas temperature before Recu [°C]” is about 130 – 150 K above the furnace chamber temperature. This fact must be taken into account when choosing the burner (ceramic material for higher temperatures). The figures in the graph only serve as guides; please give us the technical data of your application as they form the basis of our design.

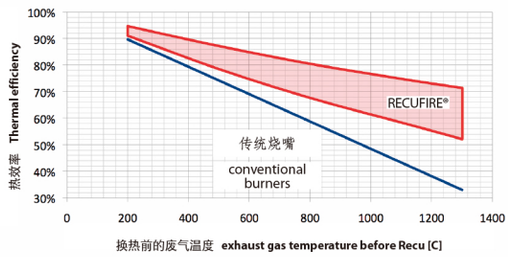

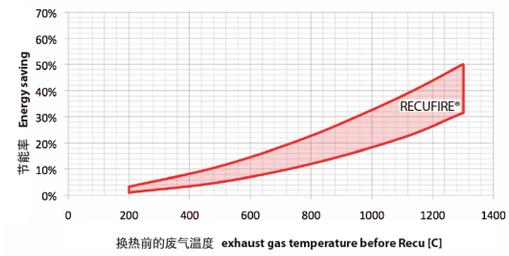

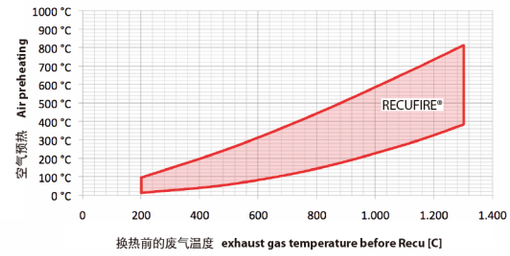

规格尺寸 RECUFIRE® M

DIMENSIONS RECUFIRE® M

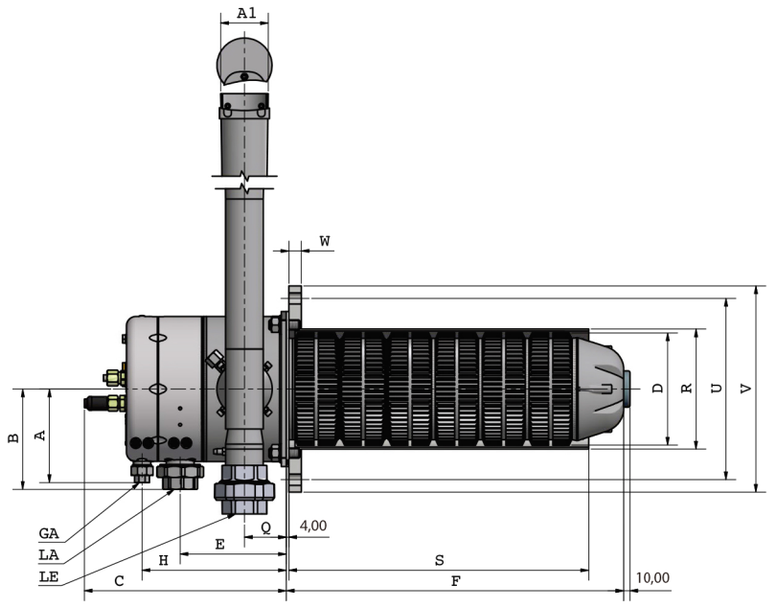

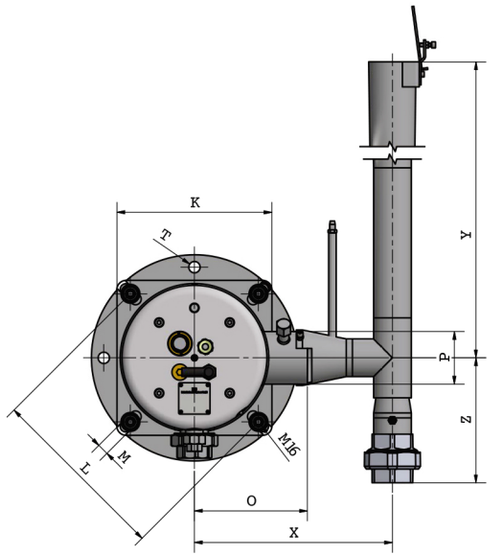

烧嘴 Burner		输入功率 1) 2) Connecting load 1) 2)	RECUFIRE®															烟气导管 Exhaust gas guide tube						烟气引射器 Exhaust gas ejector					SER 5) FIREFLEX®						
			尺寸 Dimension																																
系列 / Series	型号 / Type		GA	LA	A	B	C	D	E	F	H	K	L	M	O	P	Q	R	S	T	U	V	W	LE	X	Y	Z	A1	B1	C1	D1	E1 7)	F1	G1	H1 6)
RECUFIRE® M	10																	93x2	F - 30 mm	18	150		10								250	E1 = H1 - F - 4 mm - C1 - F1 - G1			待定 to be specifies
	30	30	R 1/2"	R 1"	117 3)	123 3)	296	86	149	390/540	204	182	210 (200 to 220)	18	152	70	59	93x2	F - 40 mm	18	220	260	10	Rp 1 1/2"	283	625	147	48	104x6	40			>80	-	
	40	40	R 1/2"	R 1"	117 3)	123 3)	296	123	149	540/590/ 640//690	204	182	210 (200 to 220)	18	152	70	59	134x3	F - 50 mm	18	220	260	10	Rp 1 1/2"	283	625	147	48	144x8	40			>100	-	
	70	70	R 1/2"	R 1 1/2"	150 4)	160 4)	324	142	170	540/590/ 640//690	231	248	290 (266 to 310)	18	181	84	67	153x3	F - 60 mm	18	290	330	20	Rp 2"	316	810	200	76	163x8	40			>100	-	
	120	120	R 1/2"	R 1 1/2"	150 4)	160 4)	324	180	170	540/590/ 640//690	231	248	290 (266 to 310)	18	181	84	67	192x3	F - 60 mm	18	290	330	20	Rp 2"	316	810	200	76	202x8	50			>100	-	
	200	200	R 1"	R 2"	203 4)	210 4)	373	228	205	540/590/ 640//690	276	349	400 (361 to 455)	18	220	108	79	246x3	F - 60 mm	18	400	470	20	Rp 2 1/2"	380	920	205	114	256x8	50			>100	-	
	300	300	R 1"	R 2"	203 4)	210 4)	373	273	205	540/590/ 640//690	276	349	400 (361 to 455)	18	220	108	79	286x3	F - 60 mm	18	400	470	20	ø 89	380	920	209	114	300x10	50			>100	-	
	400	400	R 1"	R 2"	203 4)	210 4)	373	273	205	540/590/ 640//690	276	349	400 (361 to 455)	18	220	108	79	292x3	F - 60 mm	18	400	470	20	ø 89	380	920	209	114	300x10	50			>100		

1) N = 天然气，L = 液化气；其他燃气类型，请咨询我们， C = 焦炉煤气，P = 低热值燃气
N = natural gas and L = LPG; on request C = COG and P = poor gas
2) 近似值 Approximate value, λ = 1,15
3) 带不锈钢螺纹接口 incl. Stainless steel screw
4) 带不锈钢螺纹接口 incl. Stainless steel screw
5) RECUFIRE® 陶瓷换热器烧嘴只使用陶瓷单端辐射管 for RECUFIRE® C only use C-SER
6) 请询问我们标准尺寸 ask for standard lengths
7) 四舍五入到100 mm rounded down to full 100 mm

规格尺寸 RECUFIRE® C
DIMENSIONS RECUFIRE® C

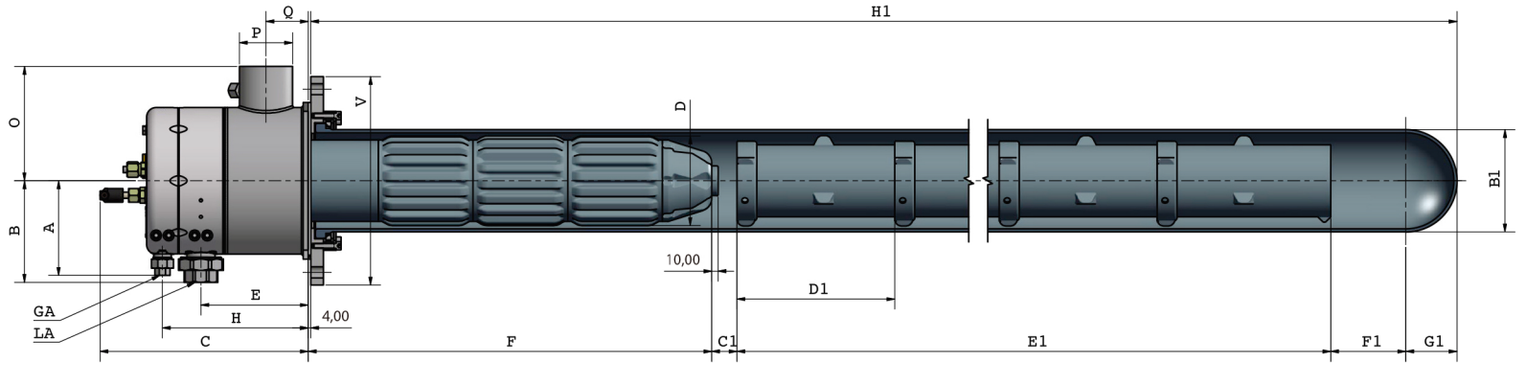

烧嘴 Burner		输入功率[1)2)] Connecting load[1)2)]	RECUFIRE®															烟气导管 Exhaust gas guide tube						烟气引射器 Exhaust gas ejector					SER[5)] FIREFLEX®						
			尺寸 Dimension																																
系列 / Series	型号 / Type		GA	LA	A	B	C	D	E	F	H	K	L	M	O	P	Q	R	S	T	U	V	W	LE	X	Y	Z	A1	B1	C1	D1	E1[7)]	F1	G1	H1[6)]
RECUFIRE® C	10	10	R 3/8"	R 1/2"	88[3)]	88[3)]	256	66	123	240/390	169	115	130 (130 to 140)	18	90	49	51	80x5	F - 22 mm	18	150	185	15	Rp 1"	200	550	100	43	80x5	30	E1	E1 = H1 - F - 4 mm - C1 - F1 - G1	>30	-	待定 to be specified
	30	30	R 1/2"	R 1"	117[3)]	123[3)]	296	84	149	390/540	204	182	210 (200 to 220)	18	152	70	59	102x5	F - 32 mm	18	220	260	20	Rp 1 1/2"	283	625	147	48	102x5	40	250		>50	51	
	40	40	R 1/2"	R 1"	117[3)]	123[3)]	296	123	149	540/590/ 640//690	204	182	210 (200 to 220)	18	152	70	59	138x5	F - 42 mm	18	220	260	20	Rp 1 1/2"	283	625	147	48	142x5	40			>70	71	
	70	70	R 1/2"	R 1 1/2"	150[4)]	160[4)]	324	142	170	540/590/ 640//690	231	248	290 (266 to 310)	18	181	84	67	157x5	F - 52 mm	18	290	330	20	Rp 2"	316	810	200	76	162x5	40			>80	81	
	120	120	R 1/2"	R 1 1/2"	150[4)]	160[4)]	324	180	170	540/590/ 640//690	231	248	290 (266 to 310)	18	181	84	67	198x6	F - 52 mm	18	290	330	20	Rp 2"	316	810	200	76	202x6	50			>80	101	
	200	200	R 1"	R 2"	203[4)]	210[4)]	373	228	205	540//690	276	349	400 (361 to 455)	18	220	108	79	252x6	F - 52 mm	18	400	470	20	Rp 2 1/2"	380	920	205	114	-	-			-	-	-
	300	300	R 1"	R 2"	203[4)]	210[4)]	373	273	205	540//690	276	349	400 (361 to 455)	18	220	108	79	292x6	F - 52 mm	18	400	470	20	ø 89	380	920	209	114	-	-			-	-	-
	400	400	R 1"	R 2"	203[4)]	210[4)]	373	273	205	540//690	276	349	400 (361 to 455)	18	220	108	79	298x6	F - 52 mm	18	400	470	20	ø 89	380	920	209	114	-	-			-	-	-

[1)] N = 天然气，L = 液化气; 其他燃气类型，请咨询我们， C = 焦炉煤气，P = 低热值燃气
N = natural gas and L = LPG; on request C = COG and P = poor gas
[2)] 近似值 Approximate value, λ = 1,15
[3)] 带不锈钢螺纹接口 incl. Stainless steel screw
[4)] 带不锈钢螺纹接口 incl. Stainless steel screw
[5)] RECUFIRE® 陶瓷换热器烧嘴只使用陶瓷单端辐射管 for RECUFIRE® C only use C-SER
[6)] 请询问我们标准尺寸 ask for standard lengths
[7)] 四舍五入到100 mm rounded down to full 100 mm

RECUFIRE® 烧嘴型号 RECUFIRE® Type	烧嘴功率 [kW] 及燃气类型 [1] Capacity [kW] and gas type [1]				直接加热 Open firing				间接加热 Indirect firing				C系列：装有散热片组组数（可选择） Type C: number of available ribbed recu-segments	M系列：装有散热片组组数（可选择） Type M: number of available ribbed recu-segments	散热器的设计和长度 [mm] (50 mm为一级) Recuperator® design and length in mm (50 mm steps)				配置 Fittings						火焰 Flame		
	天然气 Natural gas	液化气 LPG	焦炉煤气 COG	低热值燃气 Low-calorific gases	最高炉温 [°C] [2] Max. furnace temperature [°C] [2]	空气压力差 [mbar] [4] Delta p air [mbar] [4]	燃气压力差 [mbar] [4] Delta p gas [mbar] [4]	引射器空气压力差 [mbar] [3] Delta p L ejector [mbar] [3]	最高炉温，金属单端辐射管 [°C] Max. furnace temperature [°C] M-SER [2]	最高炉温，陶瓷单端辐射管 [°C] Max. furnace temperature [°C] C-SER [2]	空气压力差 [mbar] [4] Delta p air [4]	燃气压力差 [mbar] [4] Delta p gas [mbar] [4]			基本 BASIC 0/2	基本 + BASIC + 4/6	高级 ADVANCED 8/10/12	最高级 ADVANCED + 14/16	单极离子针 Ionisation single rod	UV接口 [6] / UV connection [6]	电极冷却装置 [6] Electrode cooling	一体式燃气测量孔板 Integrated measuring orifice gas	一体式空气测量孔板 Integrated measuring orifice air	空气分级燃烧 Air-staged combustion	火焰喷出速度 [m/s] [5] Flame exit velocity [m/s] [5]	火焰直径 [mm] [5] Flame diameter [mm] [5]	火焰长度 [mm] [5] Flame length [mm] [5]
															0	-	3	4									
C 10	10	10	-	-	1300	50	60	100	-	1100	60	70			-	-	240 / 390	-	x	(x)	x	x	x	x	120	40	80
M 30	30	30	-	-	1100	50	60	100	900	-	60	70			390 / 540	390 / 540	390 / 540	-	x	(x)	x	x	x	x	130	60	120
C 30	30	30	-	-	1300	50	60	100	-	1100	60	70			390	-	390 / 540	-	x	(x)	x	x	x	x	130	60	120
M 40	40	40	-	-	1100	50	60	100	1000	-	60	70			540 to 690	540 to 690	540 to 690	690	x	x	x	x	x	x	150	80	140
C 40	40	40	-	-	1300	50	60	100	-	1200	60	70			540	-	540 to 690	690	x	x	x	x	x	x	150	80	140
M 70	70	70	56	56	1100	50	60	100	1000	-	60	70			540 to 690	540 to 690	540 to 690	690	x	x	x	x	x	x	140	100	200
C 70	70	70	56	56	1300	50	60	100	-	1200	60	70			540	-	540 to 690	690	x	x	x	x	x	x	140	100	200
M 120	120	120	96	96	1100	50	60	100	1000	-	60	70			540 to 690	540 to 690	540 to 690	690	x	x	x	x	x	x	150	120	350
C 120	120	120	96	96	1300	50	60	100	-	1200	60	70			540	-	540 to 690	690	x	x	x	x	x	x	150	120	350
M 200	200	200	160	160	1100	50	60	100	1000	-	60	70			540 to 690	540 to 690	540 to 690	690	x	x	x	x	x	x	140	150	500
C 200	200	200	160	160	1300	50	60	100	-	1200	60	70			540	-	540 / 690	690	x	x	x	x	x	x	140	150	500
M 300	300	300	240	240	1100	50	60	100	1000	-	60	70			540 to 690	540 to 690	540 to 690	690	x	x	x	x	x	x	150	200	600
C 300	300	300	240	240	1300	50	60	100	-	1200	60	70			540	-	540 / 690	690	x	x	x	x	x	x	150	200	600
M 400	400	400	320	320	1100	80	80	120	1000	-	100	100			540 to 690	540 to 690	540 to 690	690	x	x	x	x	x	x	160	250	800
C 400	400	400	320	320	1300	80	80	120	-	1200	100	100			540	-	540 / 690	690	x	x	x	x	x	x	160	250	800

[1] 功率数据仅供作为参考，请咨询我们 capacity as example, please inquire
[2] 温度数据仅供作为参考，请咨询我们 temperature as example, please inquire
[3] 100 % 排出，需大约 1,5倍助燃空气，炉温为1000 °C
100 % suction, appr. 1,5 x combustion air, oven temperature 1000 °C

[4] 烧嘴前，以天然气为例，其他燃气请咨询我们 before burner, natural gas, as example, please inquire
[5] 最大功率下的近似值，天然气为例 reference values at max. capacity, natural gas
[6] 可选 optional
数值仅供参考，保留更改权利
All information given in this table is approximate and subject to modifications.

系统实例

SYSTEM EXAMPLE

RECUFIRE®-自身预热式烧嘴用在直接加热

RECUFIRE® recuperative burner for open heating

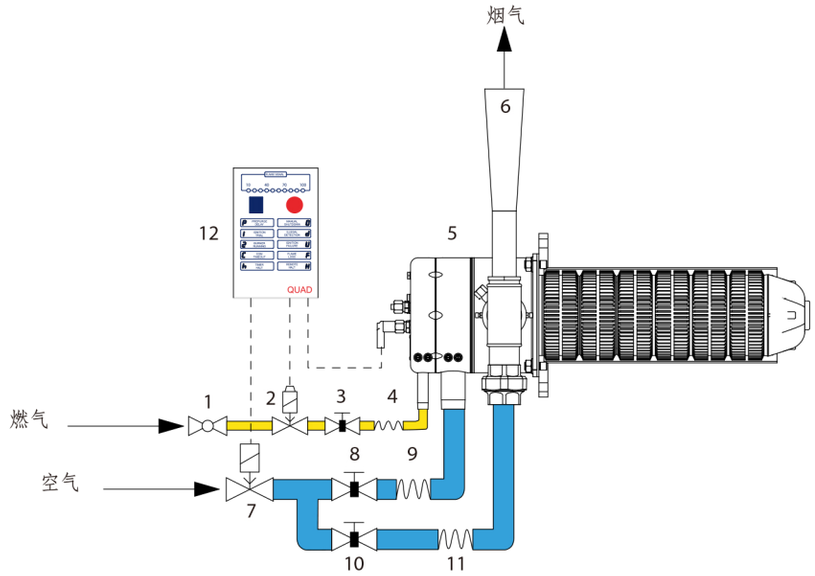

1	燃气关断阀 gas shut-off cock	7	空气电磁阀 VMR solenoid air valve VMR
2	燃气电磁阀 VML gas safety solenoid valve VML	8	助燃空气调节阀 adjusting valve combustion air
3	精调阀 adjusting valve	9	连接软管 flexible tube
4	连接软管 flexible tube	10	引射器空气调节阀 adjusting valve ejector air
5	RECUFIRE®	11	连接软管 flexible tube
6	烟气引射器 exhaust gas ejector	12	烧嘴控制器 burner control unit

RECUFIRE®-自身预热式烧嘴用在间接加热（辐射管）

RECUFIRE® recuperative burner in the radiant tube

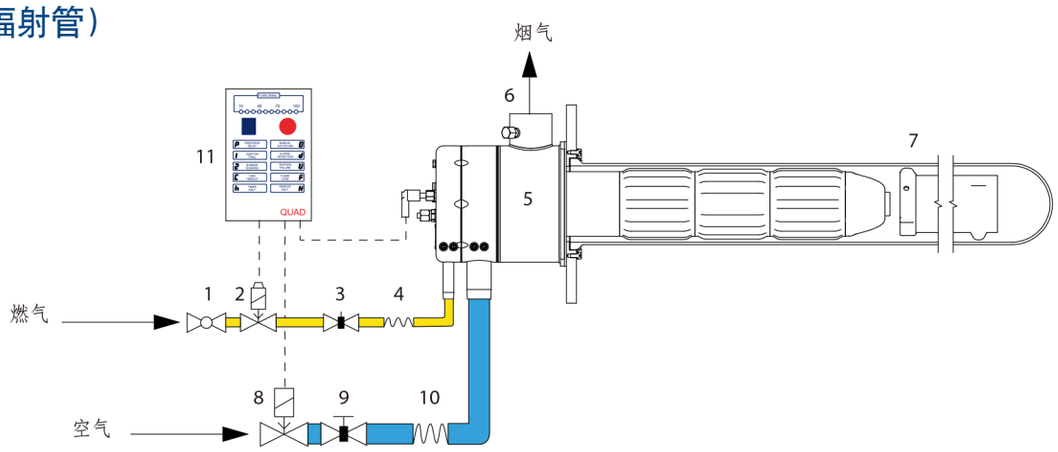

1	燃气关断阀 gas shut-off cock	7	带火焰管的辐射管 radiant tube with flame tube
2	燃气电磁阀 VML gas safety solenoid valve VML	8	空气电磁阀 VMR solenoid air valve VMR
3	精调阀 adjusting valve	9	空气调节阀 adjusting valve air
4	连接软管 flexible tube	10	连接软管 flexible tube
5	RECUFIRE®	11	烧嘴控制器 burner control unit
6	烟气接口带测量接口 exhaust gas connector with measuring point		

本系统图只是一种可能的系统应用配置举例，也可能有其他配置方式。保留更改权利，接收委托后，将根据提供的数据绘制准确尺寸图。

This equipment diagram shows an example for a possible system configuration. Other configurations are also possible.
Subject to modifications. In case of order you will receive a binding dimension drawing.

更多应用

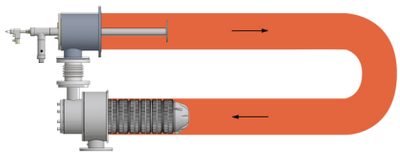

除了单端辐射管 (见2/8)，U型辐射管也应用广泛。无论是新系统安装还是对原有设备的升级改良，IBS通过提供烧嘴与换热器的不同组合，使U型辐射管也能充分利用 RECUFIRE® 高效换热器的优点。

Beside single-ended radiant tubes (see page 2/8), U-shaped radiant tubes are widely used. For new installations as well as modernizations, IBS offers burner-recuperator combinations that utilize the benefits of the highly efficient RECUFIRE® recuperators also for U-shaped radiant tubes.

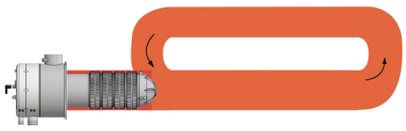

使用P型辐射管不需要对 RECUFIRE® 烧嘴进行任何改装，所以现在越来越多地用其替代U型辐射管。

The RECUFIRE® system can be used in P-radiant tubes without any modifications of the burner. These have recently been increasingly used as an alternative to U-radiant tubes.

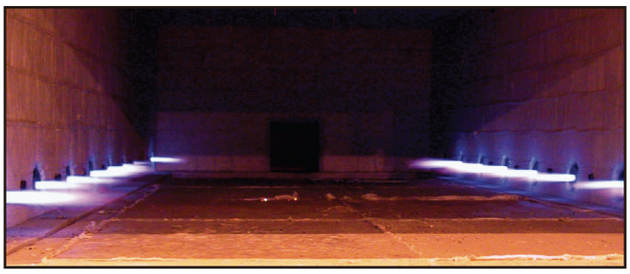

自身预热式烧嘴在台车炉的应用

Recuperative burner on a bogie hearth furnace

FURTHER APPLICATIONS

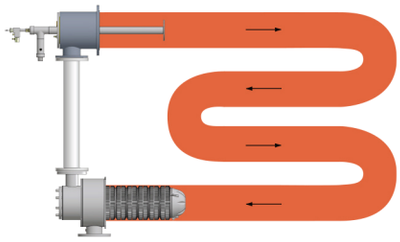

与U型辐射管相比，W型辐射管拥有大得多的辐射面积，可以用于更大功率的烧嘴。IBS通过将高效的减排技术应用于W型和U型辐射管，使极低的 NOx排放量和非常高的助燃空气预热温度得以同时实现。

W-shaped radiant tubes offer a significantly larger radiating surface area than U-radiant tubes. Consequently they can be operated with higher burner outputs. For W- and U-radiant tubes, IBS offers a highly efficient emission reducing technology which makes it possible to achieve extremely low NOx emissions, simultaneously at very high combustion air preheating.

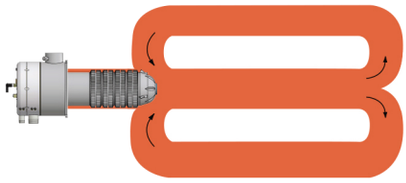

双P型辐射管拥有比U型辐射管大得多的辐射面积。RECUFIRE®烧嘴的尺寸和功率适用于所有最常用的辐射管尺寸。无论您是在设计一个新系统或是对原有系统的改造，请与我们联系。

Double-P-radiant tubes have a much larger radiating surface area than U-radiant tubes. The diameters and capacities of RECUFIRE® recuperative burners are tuned to the most common radiant tube dimensions. Whether you are planning a new system or a modernization, get in contact with us!

RECUFIRE® 辐射管在辊底炉（厚钢板生产）的应用

RECUFIRE® radiant tubes on a roller hearth furnace for plate

其他 IBS产品 Other IBS-Products:

德国IBS工业燃烧系统

中国区合作伙伴：上海异博热能科技有限公司

上海市沪松公路1658号318室

18221287758

sh_ebo@163.com

www.sh-ebo.com

Industrial Burner Systems